NEW

DUCTED MEDIUM PRESSURE

COMPACT DESIGN

The unit has a thickness of 248 mm which allows better adaptation and ease of installation.

CONDENSATE DRAIN

The medium-pressure ducted units includes a condensate drain pump as standard. This guarantees a maximum prevalence of 600 mm measured from the base of the machine. There is the possibility of performing condensate drain by gravity (reversible on both sides).

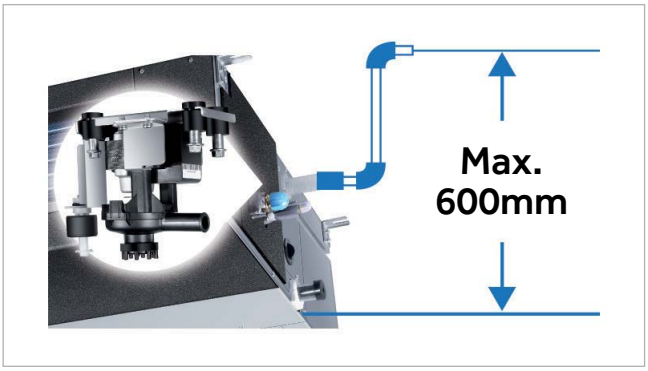

EASY INSTALLATION

- The connection of electrical cables is now possible through only one screw.
- The ducted units have two options for connecting the air extraction channel: rear or lower.

WiFi

Besides normal wired/infrared control. Haier supplies Smart Control from hOn APP. Including the on/off. operation mode selection, fan speed temperature, and air flow adjustment, schedule, UV function and steri-clean 56°C, etc.

FRESH AIR

Air exchange allows introduction of clean air into the room.

UVC Sterilisation

The built-in LED UV lights kill airborne hazards when the air circulates from air inlet, ensuring the clean air out.

Flexible air distribution

The ducted units satisfy multiple installation solutions (circular or rectangular channels).

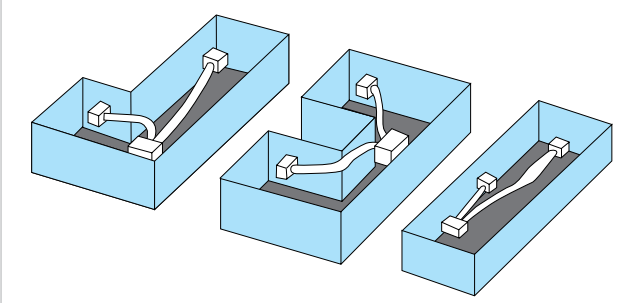

NEW

DUCTED MEDIUM PRESSURE

AD35 - AD50 - AD71

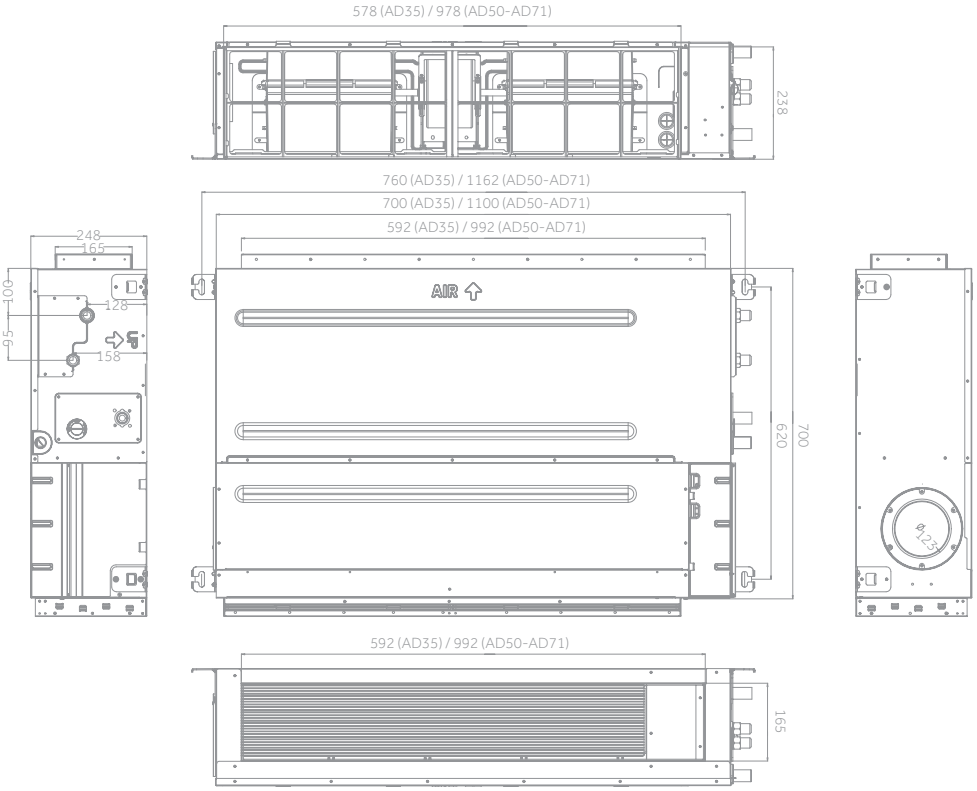

1U35

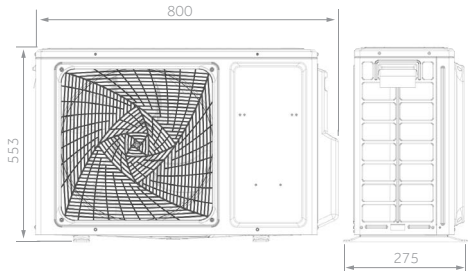

1U50

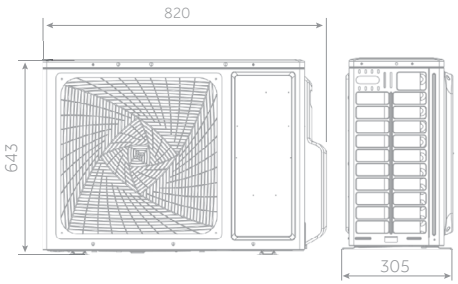

3,5 kW 5,0 kW 7,1 kW

1U71

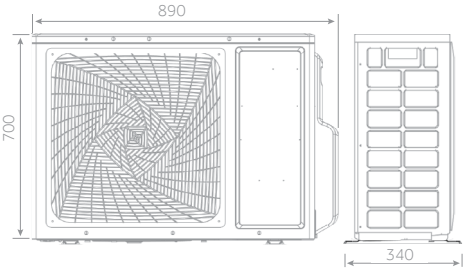

NEW

DUCTED MEDIUM PRESSURE

Haier

3,5 kW

5,0 kW

7,1 kW

OPTIONAL CONTROL

Silence | Compact Design | 3D | Condensate Drain Pump | Flexible Installation | UVC Sterilisation | Wi-Fi control integrated

- Low noise level
- Compact design
- 'Fresh air' knockout is incorporated in the chassis to allow fresh air introduction of up to 20% of nominal unit air flow without compromising the cooling capacity. Condensate drain pump
- UCV Sterilisation
- Wi-Fi control integrated

INDOOR UNIT	Model		AD35S2SM3FA(H)	AD50S2SM3FA(H)	AD71S2SM3FA(H)
OUTDOOR UNIT	Model		1U35S2SM1FA-2	1U50S2SJ2FA-2	1U71S2SR2FA
Performance data					
Output power - COOLING	nom (min-max)	kW	3,50 (0,90-4,50)	5,00 (1,80-6,00)	7,10 (2,00-8,20)
Output power - HEATING	nom (min-max)	kW	4,00 (1,00-4,80)	6,00 (2,00-6,20)	7,50 (2,50-8,50)
Absorbed power – COOLING	nom (min-max)	kW	1,08 (0,28-1,80)	1,55 (0,55-2,00)	2,20 (0,50-3,00)
Absorbed power – HEATING	nom (min-max)	kW	1,08 (0,28-1,80)	1,48 (0,60-2,00)	2,02 (0,60-3,00)
Energy class	EER	W/W	3,23	3,23	3,23
	COP	W/W	3,71	3,71	3,71
COOLING Pdesign	35 °C	kW	3,50	5,00	7,10
HEATING Pdesign	(-10 °C)	kW	2,70	4,50	5,00
Energy class	SEER		6,10 (A++)	6,10 (A++)	6,10 (A++)
	SCOP		3,80 (A)	3,80 (A)	3,80 (A)
Annual Energy Consumption - COOLING		kWh/a	215	291	406
Annual Energy Consumption - HEATING		kWh/a	1020	1782	1827
Indoor Unit					
Power supply		Ph/V/Hz	1/220~240/50/60	1/220~240/50/60	1/220~240/50/60
Treated air volume	(H/M/L/Q)	m3/h	840/720/600/450	1020/900/780/550	1440/1260/1100/900
External static pressure		Pa	25(default)/37/50/70/90/100/110/120/130/150		
High sound power		dB	55	56	58
Sound pressure		dB(A)	41/35/28/26	43/37/30/28	44/41/39/36
Net dimensions	WxDxH	mm	700x700x248	1100x700x248	1100x700x248
Packaging dimensions	WxDxH	mm	914x866x318	1316x866x318	1316x866x318
Net/gross weight		kg	26,0/30,0	31,0/35,0	31,0/35,0
Outdoor Unit					
Power supply		Ph/V/Hz	1/220~240/50	1/220~240/50	1/220~240/50/60
Power cable		N x mm2	3 x 1,5	3 x 1,5	3 x 4,0
Interconnection cable		N x mm2	4 x 1,0	4 x 1,0	4 x 2,5
Sound power	H	dB	61	63	67
Sound pressure	H	dB(A)	48	50	54
Running current cooling/heating	Max	A	8,0	10,68	13,1
Starting current cooling/heating	Max	A	2,0	2,0	2,0
Net dimensions	WxDxH	mm	800x275x553	820x305x643	890x340x700
Packaging dimensions	WxDxH	mm	902x375x607	940x390x697	1046x460x780
Net/gross weight		kg	30,0/32,9	35,7/38,5	45,0/50,0
Compressor type			Rotary inverter	Rotary inverter	Twin rotary inverter
Installation data					
Refrigerant			R32	R32	R32
Liquid pipe	Ø	mm (inch)	6,35 (1/4)	6,35 (1/4)	9,52 (3/8)
Gas pipe	Ø	mm (inch)	9,52 (3/8)	12,70 (1/2)	15,88 (5/8)
Standard pipe length without refrigerant charge		m	7	7	10
Maximum pipe length		m	20	25	50
Maximum IU - OU elevation		m	10	15	30
Refrigerant charge in the factory		kg	0,78	1,10	1,30
Refrigerant charge in the factory		TCO2eq	0,53	0,74	0,88
Additional ref. charge over std length		g/m	20	20	45
Outdoor operating limits - COOLING	min-max	°C	-20~46		
Outdoor operating limits - HEATING	min-max	°C	-20~24		

The data in this catalogue is purely indicative as the data may vary. Please be advised to check the accuracy of the data with the supplier before purchasing products.

NEW

DUCTED MEDIUM PRESSURE

AD105 - AD125

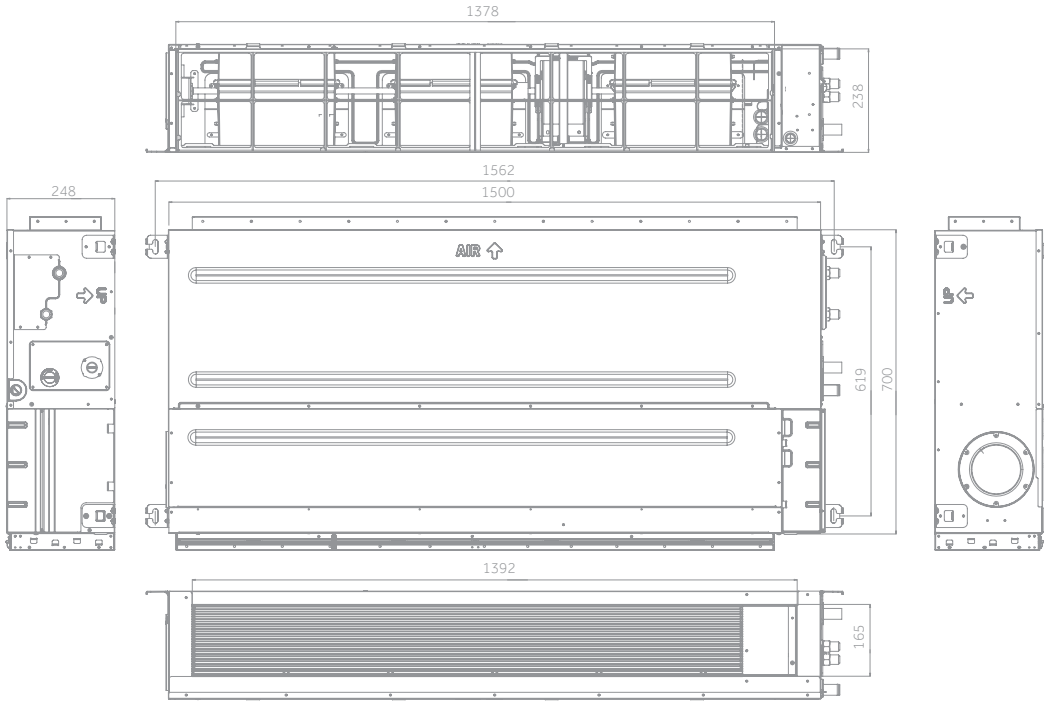

1U105

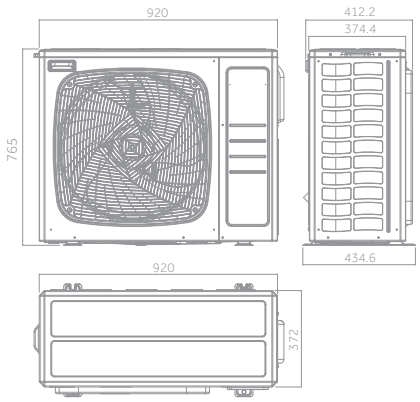

1U125

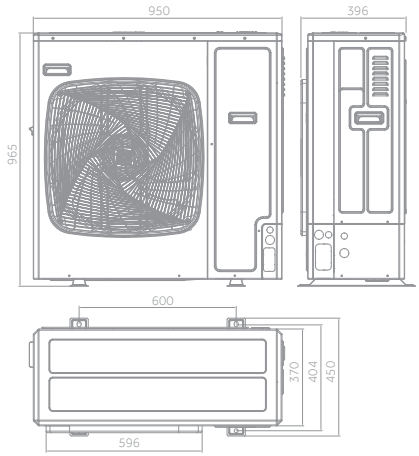

10,5 kW

12,5 kW

NEW

DUCTED MEDIUM PRESSURE

Haier

10,5 kW

12,5 kW

OPTIONAL CONTROL

Silence | Compact Design | 3D | Condensate Drain Pump | Flexible Installation | UVC Sterilisation | Wi-Fi control integrated

Unit R32 compatible R410A

- Low noise level
- Compact design
- 'Fresh air' knockout is incorporated in the chassis to allow fresh air introduction of up to 20% of nominal unit air flow without compromising the cooling capacity. Condensate drain pump
- UCV Sterilisation
- Wi-Fi control integrated

INDOOR UNIT	Model		AD105S2SM3FA(H)	AD105S2SM3FA(H)	AD125S2SM8FA(H)	AD125S2SM8FA(H)
OUTDOOR UNIT	Model		1U105S2SS2FA	1U105S2SS1FB	1U125S2SN2FA	1U125S2SN2FB
Performance data						
Output power - COOLING	nom (min-max)	kW	9,50 (2,50-10,00)	9,50 (2,50-10,00)	12,30 (3,00-13,00)	12,40 (3,00-13,00)
Output power - HEATING	nom (min-max)	kW	10,20 (3,00-10,50)	10,50 (3,00-11,00)	12,70 (3,50-13,50)	12,80 (3,50-13,50)
Absorbed power – COOLING	nom (min-max)	kW	3,16 (0,50-4,00)	3,27 (0,50-4,00)	4,60 (1,00-6,00)	4,51 (1,00-6,00)
Absorbed power – HEATING	nom (min-max)	kW	2,91 (0,50-4,00)	3,00 (0,50-4,00)	3,93 (1,00-6,00)	3,87 (1,00-6,00)
Energy class	EER	W/W	3,01	2,90	2,67	2,75
	COP	W/W	3,50	3,50	3,23	3,31
COOLING Pdesign	35 °C	kW	9,50	9,50	12,30	12,40
HEATING Pdesign	(-10 °C)	kW	7,20	6,00	8,00	8,00
Energy class	SEER		6,10 (A++)	6,00 (A+)	5,72 (A+)	5,85 (A+)
	SCOP		3,80 (A)	3,91 (A)	3,93 (A)	3,96 (A)
Annual Energy Consumption - COOLING		kWh/a	544	569	735	718
Annual Energy Consumption - HEATING		kWh/a	2792	2094	3032	3003
Indoor Unit						
Power supply		Ph/V/Hz	1/220~240/50/60	1/220~240/50/60	1/220~240/50/60	1/220~240/50/60
Treated air volume	(H/M/L/Q)	m3/h	1600/1480/1360/1240	1600/1480/1360/1240	2250/1960/1680/1500	2250/1960/1680/1500
External static pressure		Pa	25/37(default)/50/70/90/100/110/120/130/150			
High sound power		dB	61	64	65	65
Sound pressure		dB(A)	47/44/40/37	47/44/40/37	48/45/42/39	48/45/42/39
Net dimensions	WxDxH	mm	1500x700x248	1500x700x248	1500x700x248	1500x700x248
Packaging dimensions	WxDxH	mm	1711x870x325	1711x870x325	1711x870x325	1711x870x325
Net/gross weight		kg	46,0/55,0	46,0/55,0	48,0/57,0	48,0/57,0
Outdoor Unit						
Power supply		Ph/V/Hz	1/220~240/50/60	3/380~415/50/60	1 /220~240/ 50/60	3 /380~415/ 50/60
Power cable		N x mm2	3 x 4,0	5 x 4,0	3 x 6,0	5 x 4,0
Interconnection cable		N x mm2	4 x 2,5	4 x 2,5	4 x 2,5	4 x 2,5
Sound power	H	dB	66	68	72	72
Sound pressure	H	dB(A)	53	54	58	58
Running current cooling/heating	Max	A	16,5	6,8	26,0	10,0
Starting current cooling/heating	Max	A	3,0	1,0	4,0	2,0
Net dimensions	WxDxH	mm	920*372*765	920*372*765	950x370x965	950x370x965
Packaging dimensions	WxDxH	mm	1036*478*820	1085x485x830	1050x485x1130	1050x485x1130
Net/gross weight		kg	60,0/65,0	61,0/66,0	84,0/89,0	85,0/90,0
Compressor type			Twin rotary inverter	Twin rotary inverter	Twin rotary inverter	Twin rotary inverter
Installation data						
Refrigerant			R32	R32	R32	R32
Liquid pipe	Ø	mm (inch)	9,52 (3/8)	9,52 (3/8)	9,52 (3/8)	9,52 (3/8)
Gas pipe	Ø	mm (inch)	15,88 (5/8)	15,88 (5/8)	15,88 (5/8)	15,88 (5/8)
Standard pipe length without refrigerant charge		m	30	30	30	30
Maximum pipe length		m	50	50	50	50
Maximum IU - OU elevation		m	30	30	30	30
Refrigerant charge in the factory		kg	1,70	1,70	2,30	2,30
Refrigerant charge in the factory		TCO2eq	1,15	1,15	1,55	1,55
Additional ref. charge over std length		g/m	45	45	45	45
Outdoor operating limits - COOLING	min-max	°C	-20~46			
Outdoor operating limits - HEATING	min-max	°C	-20~24			

The data in this catalogue is purely indicative as the data may vary. Please be advised to check the accuracy of the data with the supplier before purchasing products.

NEW

DUCTED MEDIUM PRESSURE

AD140 - AD160

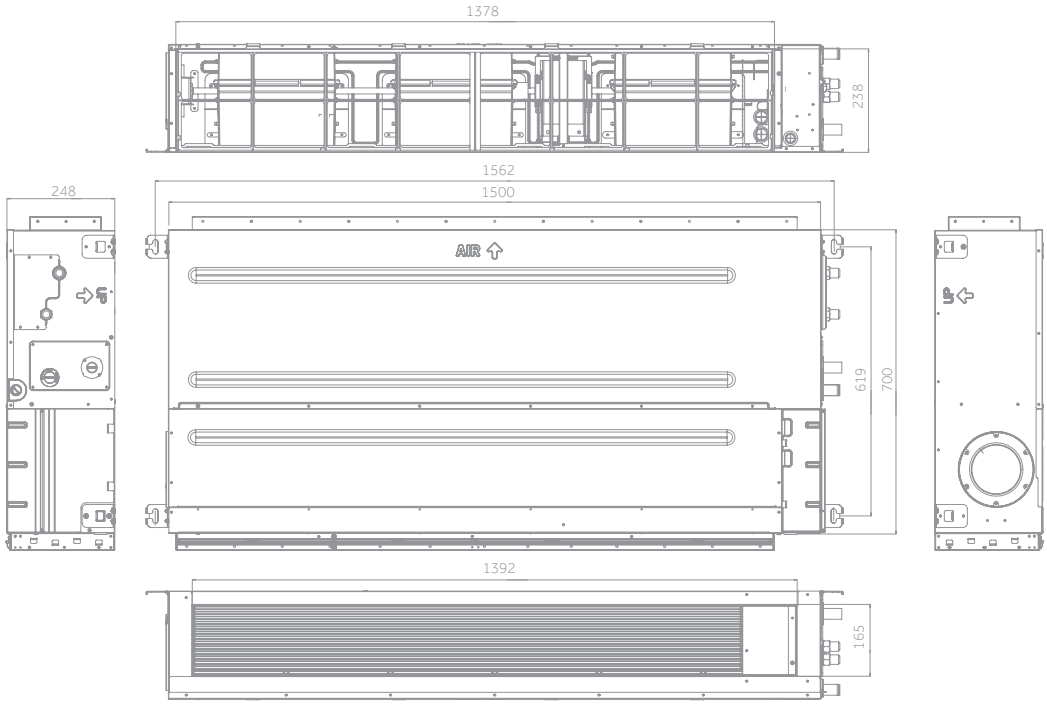

1U140

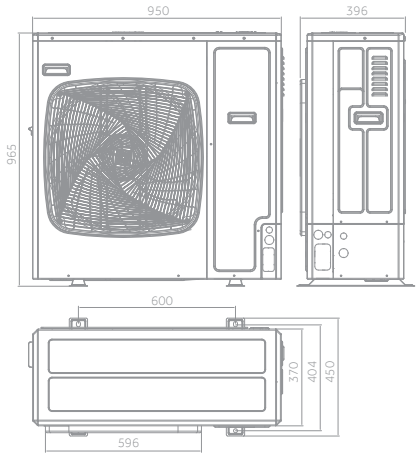

1U140 - 1U160

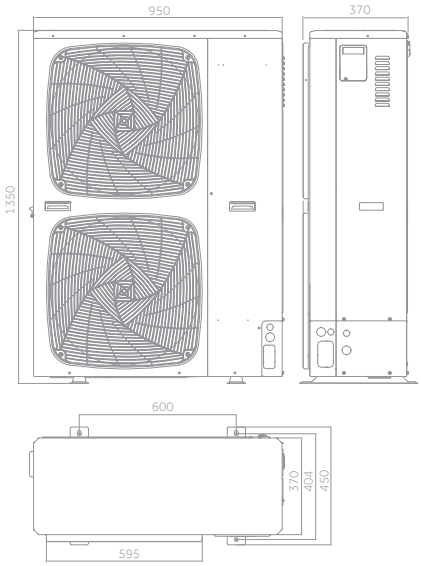

14,0 kW

14,0 kW

16,0 kW

NEW

DUCTED MEDIUM PRESSURE

Haier

14,0 kW

16,0 kW

OPTIONAL CONTROL

Silence | Compact Design | 3D | Condensate Drain Pump | Flexible Installation | UVC Sterilisation | Wi-Fi control integrated

Unit R32 compatible R410A

- Low noise level
- Compact design
- 'Fresh air' knockout is incorporated in the chassis to allow fresh air introduction of up to 20% of nominal unit air flow without compromising the cooling capacity. Condensate drain pump
- UCV Sterilisation
- Wi-Fi control integrated

INDOOR UNIT	Model		AD140S2SM8FA(H)	AD140S2SM8FA(H)	AD140S2SM8FA(H)	AD140S2SM8FA(H)	AD160S2SM3FA(H)
OUTDOOR UNIT	Model		1U140S2SN1FA	1U140S2SN1FB	1U140S2SP2FA	1U140S2SP2FB	1U160S2SP1FB
Performance data							
Output power - COOLING	nom (min-max)	kW	13,40 (3,50-14,00)	13,40 (3,50-14,00)	13,40 (4,00-15,00)	13,40 (4,00-15,00)	16,00 (4,50-16,50)
Output power - HEATING	nom (min-max)	kW	15,00 (4,00-15,50)	15,00 (4,00-15,50)	15,00 (4,50-16,00)	15,00 (4,50-16,00)	17,00 (5,00-18,00)
Absorbed power – COOLING	nom (min-max)	kW	5,28 (1,00-6,50)	5,18 (1,00-6,50)	4,17 (1,00-6,00)	4,15 (1,00-6,00)	5,48 (1,00-6,50)
Absorbed power – HEATING	nom (min-max)	kW	4,92 (1,00-6,50)	4,79 (1,00-6,50)	4,04 (1,00-6,00)	4,02 (1,00-6,00)	4,82 (1,00-6,50)
Energy class	EER	W/W	2,54	2,59	3,21	3,23	2,92
	COP	W/W	3,05	3,13	3,71	3,73	3,53
COOLING Pdesign	35 °C	kW	13,40	13,40	13,40	13,40	16,00
HEATING Pdesign	(-10 °C)	kW	8,50	8,50	11,00	11,00	11,00
Energy class	SEER		5,62 (A+)	5,64 (A+)	6,16 (A++)	6,19 (A++)	5,94 (A+)
	SCOP		3,93 (A)	3,96 (A)	4,06 (A+)	4,06 (A+)	4,06 (A+)
Annual Energy Consumption - COOLING		kWh/a	835	832	761	758	943
Annual Energy Consumption - HEATING		kWh/a	3032	3003	3796	3798	3798
Indoor Unit							
Power supply		Ph/V/Hz	1/220~240/50/60	1/220~240/50/60	1/220~240/50/60	1/220~240/50/60	1/220~240/50/60
Treated air volume	(H/M/L/Q)	m3/h	2500/2160/1780/1500	2500/2160/1780/1500	2500/2160/1780/1500	2500/2160/1780/1500	2500/2160/1780/1500
External static pressure		Pa	25/37(default)/50/70/90/100/110/120/130/150				
High sound power		dB	66	66	66	66	67
Sound pressure		dB(A)	48/45/42/39	48/45/42/39	48/45/42/39	48/45/42/39	48/45/42/39
Net dimensions	WxDxH	mm	1500x700x248	1500x700x248	1500x700x248	1500x700x248	1500x700x248
Packaging dimensions	WxDxH	mm	1711x870x325	1711x870x325	1711x870x325	1711x870x325	1711x870x325
Net/gross weight		kg	48,0/57,0	48,0/57,0	48,0/57,0	48,0/57,0	48,0/57,0
Outdoor Unit							
Power supply		Ph/V/Hz	1 /220~240/ 50/60	3 /380~415/ 50/60	1/220~240/50/60	3/380~415/50/60	3/380~415/50/60
Power cable		N x mm2	3 x 6,0	5 x 4,0	3 x 6,0	5 x 4,0	5 x 4,0
Interconnection cable		N x mm2	4 x 2,5	4 x 2,5	4 x 2,5	4 x 2,5	4 x 2,5
Sound power	H	dB	72	72	70	70	72
Sound pressure	H	dB(A)	58	58	53	53	58
Running current cooling/heating	Max	A	30,0	10,0	32,0	10,0	10,0
Starting current cooling/heating	Max	A	5,0	2,0	6,0	2,0	2,0
Net dimensions	WxDxH	mm	950x370x965	950x370x965	950x370x1350	950x370x1350	950x370x1350
Packaging dimensions	WxDxH	mm	1050x485x1130	1050x485x1130	1050x485x1500	1050x485x1500	1050x485x1500
Net/gross weight		kg	84,0/89,0	85,0/90,0	105,0/118,0	101,0/116,0	101,0/116,0
Compressor type			Twin rotary inverter	Twin rotary inverter	Twin rotary inverter	Twin rotary inverter	Twin rotary inverter
Installation data							
Refrigerant			R32	R32	R32	R32	R32
Liquid pipe	Ø	mm (inch)	9,52 (3/8)	9,52 (3/8)	9,52 (3/8)	9,52 (3/8)	9,52 (3/8)
Gas pipe	Ø	mm (inch)	15,88 (5/8)	15,88 (5/8)	15,88 (5/8)	15,88 (5/8)	19,05 (3/4)
Standard pipe length without refrigerant charge		m	30	30	30	30	30
Maximum pipe length		m	70	70	70	70	70
Maximum IU - OU elevation		m	30	30	30	30	30
Refrigerant charge in the factory		kg	2,30	2,30	2,90	3,50	3,50
Refrigerant charge in the factory		TCO2eq	1,55	1,55	1,96	2,36	2,36
Additional ref. charge over std length		g/m	45	45	45	45	45
Outdoor operating limits - COOLING	min-max	°C	-20~46				
Outdoor operating limits - HEATING	min-max	°C	-20~24				

The data in this catalogue is purely indicative as the data may vary. Please be advised to check the accuracy of the data with the supplier before purchasing products.